| Rev | Date | Description | ECO | Drawn. | App. |
|---|---|---|---|---|---|
| A | 25/09/2018 | Released | XXXX | T.P. | A.B. |
| | | | | | |

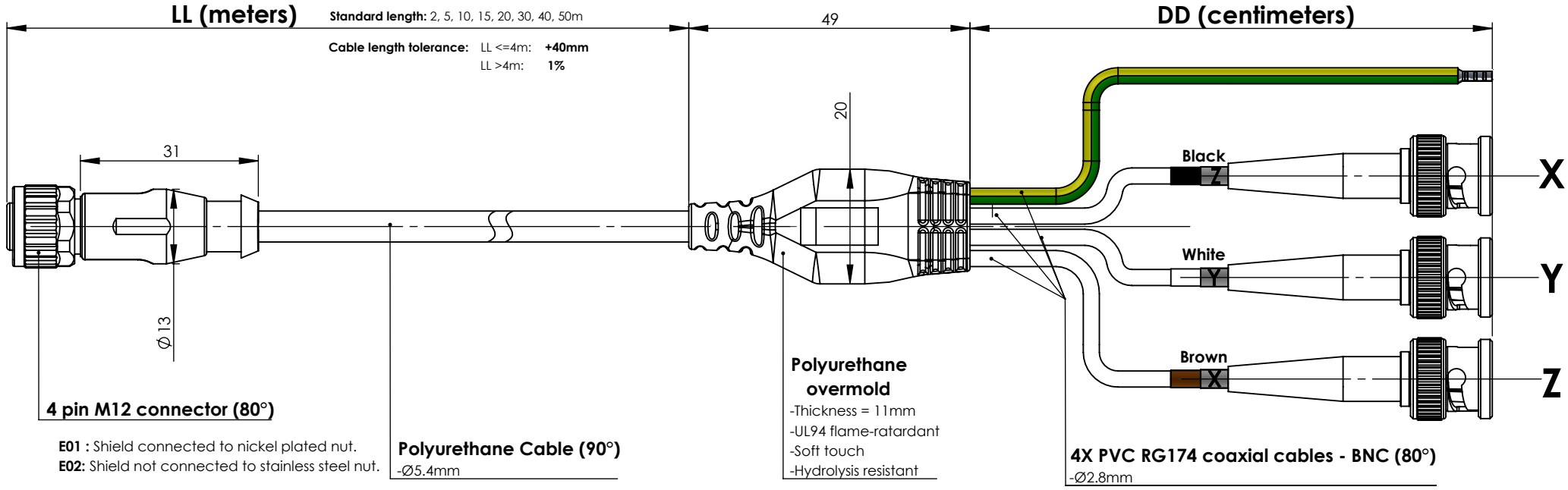


*Wiring diagram*

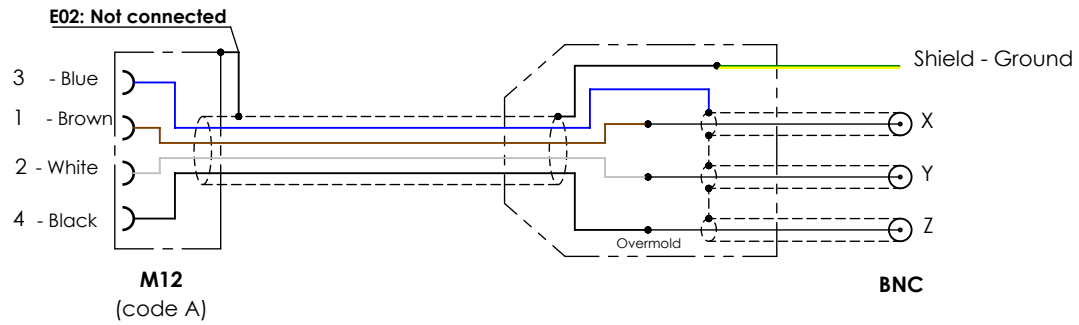


VibraSens

| Size: A4H | Rev:A |
|---|---|
| FSCM :- - - - | |

**M12 to BNC Triaxial overmolded cable**

This drawing is confidential and is the property of Vibrasens. Reproduction or manufacturing rights granted by written permission only.

| PNR, Drawing N° | Scale | Sheet |
|---|---|---|
| **10.01-E0X-31-LL_TF02-51-DD** | 1:1 | 1/2 |

| Recommended configuration | | | |
|---|---|---|---|
| **Is sensor housing electrically connected to machine ?** | **Is the machine grounded ?** | **Optimum** | **Not optimum for EMC** |
| **YES** | **YES** | 10.01-E01-31-LL_TCF02-51-DD<br>10.01-E02-31-LL_TCF02-51-DD<br>10.01-E02-31-LL_TF02-51-DD<br>(==> ground cable sould be connected) | 10.01-E01-31-LL_TF02-51-DD<br>(==> ground cable sould be connected) |
| **YES** | **NO** | 10.01-E01-31-LL_TF02-51-DD<br>10.01-E01-31-LL_TCF02-51-DD | 10.01-E02-31-LL_TCF02-51-DD<br>10.01-E02-31-LL_TF02-51-DD<br>(==> ground cable sould be connected) |
| **NO** | **YES** | | |
| **NO** | **NO** | | |

**(EMC: Electromagnetic compatibility)**

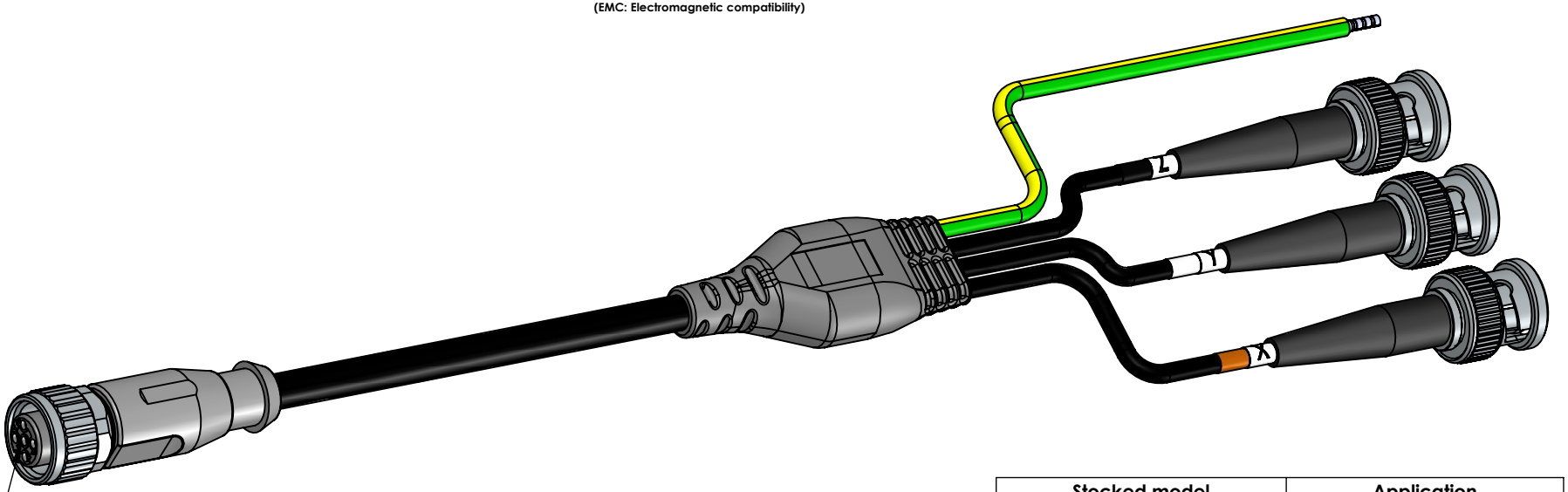

| Stocked model | Application |
|---|---|
| **10.01-E02-31-05_TF02-51-30** | Vibrasens triaxial model 131, 138 |
| **10.01-E02-31-10_TF02-51-30** | |
| | |

Contact assignment

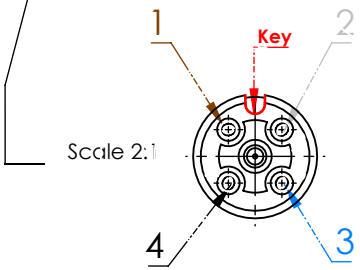


Cable specification

Rated voltage (IEC 61076-2-101): 160V

Insulation resistance (IEC60512): >=100MΩ

Pollution degree (IEC 60664-1) : 3/2

Degree of protection (IEC 60529) : IP 67, in mated condition

Temperature range (IEC 6664-1) : -30°C/+80°C

For detailed technical specifications:
See *10.01-A01-E01-31-LL*

This drawing is confidential and is the property of Vibrasens. Reproduction or manufacturing rights granted by written permission only.

| VibraSens | Size: A4H | Rev:A |
|---|---|---|
| | FSCM :- - - - | |
| PNR, Drawing N° **10.01-E0X-31-LL_TF02-51-DD** | Scale 1:1 | Sheet 2/2 |